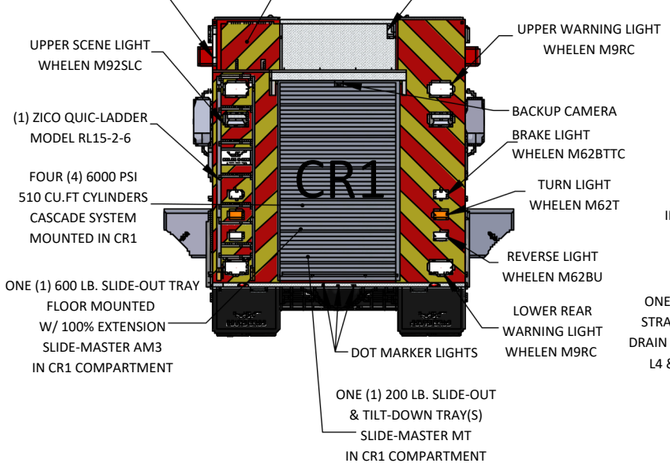

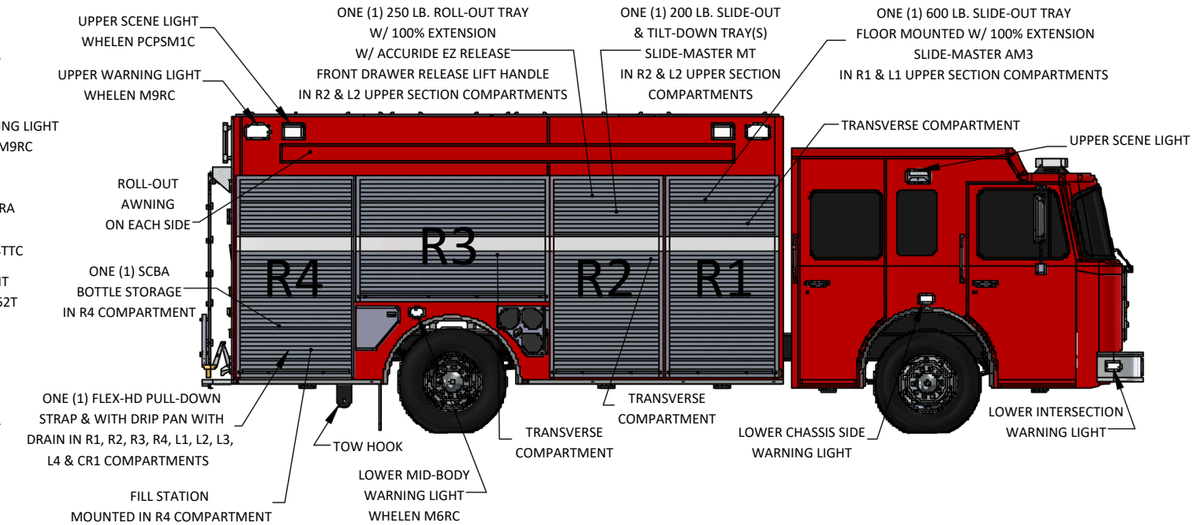

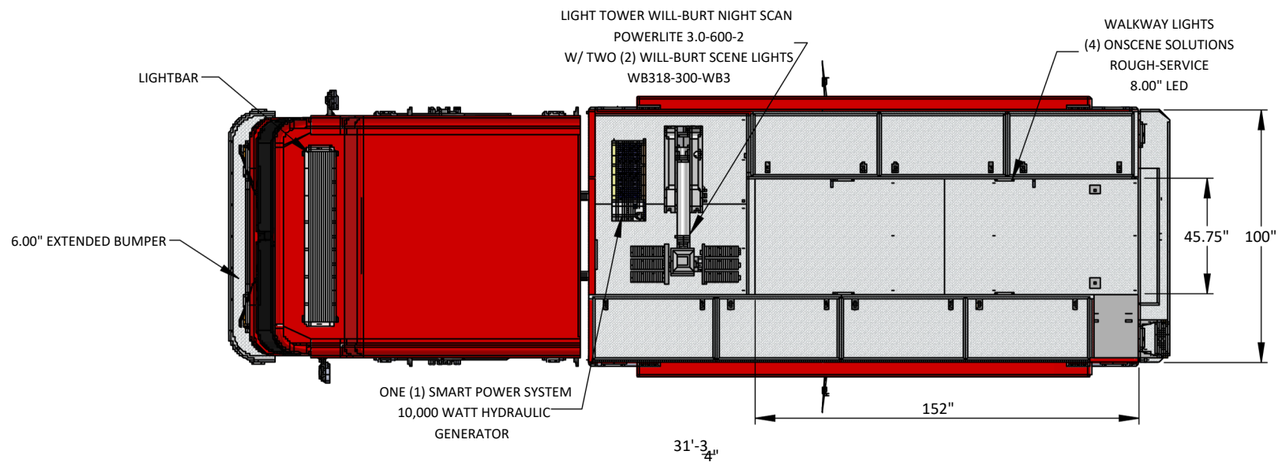

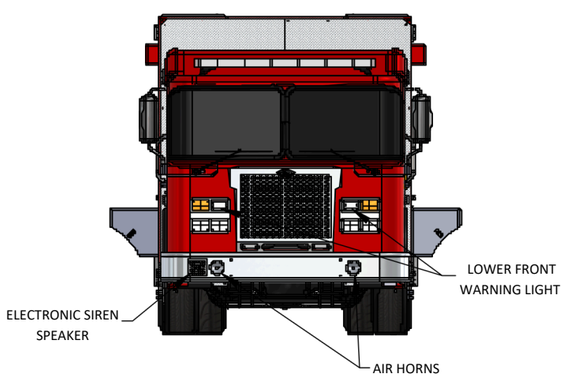

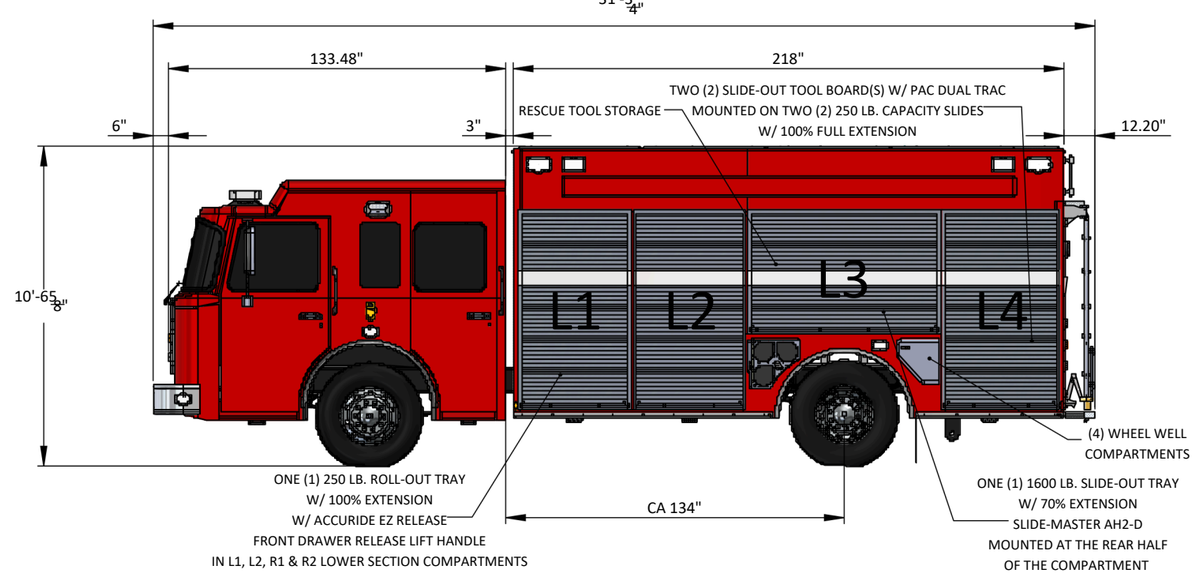

CHASSIS INFO

CHASSIS	:SPARTAN FC-94, SINGLE AXLE
CAB	:4 DOOR CREW CAB
ENGINE	:CUMMINS L9, 450 HP
TRANSMISSION	:ALLISON EVS 3000, AUTOMATIC
FRONT AXLE	:18,000 LBS.
REAR AXLE	:27,000 LBS.
BUMPER	:EXTENDED 6.00"

BODY INFO

BODY DIMENSION	:218.00"L X 106.00" T X 100.00" W
DOOR TYPE	:AMDOR BRAND ROLL-UP DOORS, SATIN FINISH
ROOF ACCESS LADDER	:ONE (1) ZICO QUIC-LADDER RL 15-2-6

UPPERBODY COMPARTMENTS

UPPER BODY LH SIDE (4)	:46.00" L X 24.00" W X 20.00" D
UPPER BODY RH SIDE (3)	:47.00" L X 24.00" W X 20.00" D

LH SIDE COMPARTMENTS

L1	:40.25" W X 72.00" H
L2	:40.25" W X 72.00" H
L3	:72.00" W X 42.00" H
L4	:42.00" W X 72.00" H

RH SIDE COMPARTMENTS

R1	:40.25" W X 72.00" H
R2	:40.25" W X 72.00" H
R3	:72.00" W X 42.00" H
R4	:42.00" W X 72.00" H

REAR COMPARTMENT

CR1	:44.00" W X 72.00" H

FOUTS FIRE

DIMENSIONS SHOWN ARE APPROXIMATE AND SUBJECT TO CHANGE AS MAY BE FOUND NECESSARY DURING CONSTRUCTION. MINOR DETAILS MAY NOT BE SHOWN TO RETAIN CLARITY WITHIN THE DRAWING. THE DRAWING IS FOR REFERENCE PURPOSES ONLY. SPECIFICATIONS SHALL BE THE FINAL AUTHORITY OF WHAT IS SUPPLIED ON THE APPARATUS.
OVERALL HEIGHT IS IN LOADED CONDITION. UNLOADED HEIGHTS MAY BE 4" ABOVE HEIGHTS SHOWN.
THE EFFECTIVE DOOR OPENINGS WILL BE APPROX. 2" LESS THAN THE NOTED COMPARTMENT OPENING FOR ROLL UP DOORS AND UP TO APPROX. 4" LESS FOR HINGED DOORS
INCLUSION OF AN ITEM ON THE DRAWING DOES NOT CONSTITUTE INCLUSION OF THAT ITEM WITH THE FINAL DELIVERED UNIT
IN THE EVENT THERE ARE DISCREPANCIES BETWEEN THE DRAWING AND THE SPECIFICATIONS. THE SPECIFICATIONS SHALL PREVAIL

DECIMAL : ± 0.062 FRACTIONAL : ±1/16	ENG AV	REV R00	SCALE 1:60	DWG SIZE D	DATE 16 MAR 2026
FOR :					
TITLE :	HEAVY DUTY RESCUE				
PRODUCTION :					